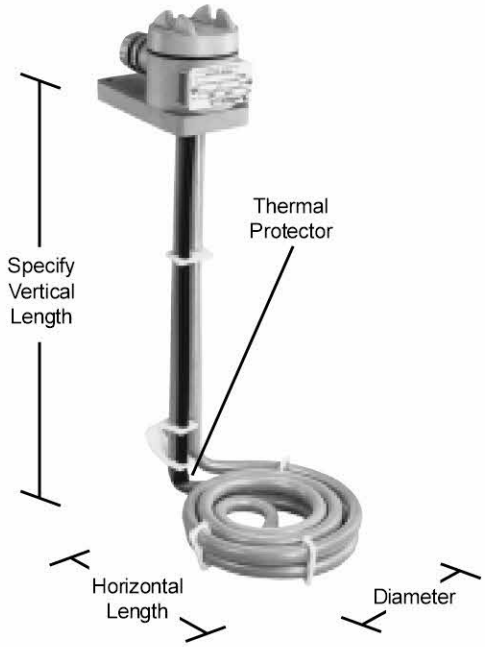

HXFL SERIES, LOW PROFILE L-SHAPED FLUOROPOLYMER (PTFE) HEATERS							
WATTS	VOLTS (See Pg.1)	HORIZ. LENGTH In./(mm)	STD. VERT. LENGTH* In./(mm)	DIA. In./(mm)	MAX. COLD ZONE	MODEL NUMBER	SHIP WGT. Lbs./(kg)
500	120	5	12	5	36	HXFL.5105-R*-**	6
	240	(125)	(305)	(125)	(915)	HXFL.5205-R*-**	(2.5)
1000	120	6	12	6	36	HXFL1106-R*-**	7
	240	(155)	(305)	(155)	(915)	HXFL1206-R*-**	(3.5)
2000	120	8	18	8	35	HXFL2108-R*-**	8
	240	(205)	(460)	(205)	(890)	HXFL2208-R*-**	(4)
	480					HXFL2408-R*-**	
3000	240	9	18	9	35	HXFL3209-R*-**	13
	480	(230)	(460)	(230)	(890)	HXFL3409-R*-**	(6)
4000	240	11	18	11	35	HXFL4211-R*-**	15
	480	(280)	(460)	(280)	(890)	HXFL4411-R*-**	(7)
5000	240	12	18	12	31	HXFL5212-R*-**	18
	480	(305)	(460)	(305)	(790)	HXFL5412-R*-**	(8)
6000	240	13	18	13	25	HXFL6213-R*-**	22
	480	(330)	(460)	(330)	(635)	HXFL6413-R*-**	(10)

Single phase only. Guards recommended. This configuration is not recommended for electroless chemistry, phosphoric acid, or applications prone to sludge development.

Product Features and Benefits:

- **SUPERIOR CHEMICAL RESISTANCE**: Inert to most aqueous acid, alkaline, anodizing and pickling solutions up to 212°F (100°C).
- **RUGGGED CONSTRUCTION**: Heavy wall fluoropolymer (PTFE) covered stainless steel element reduces permeation and eliminates the need for gas purge systems. Guaranteed 100% pinhole free.
- **OUTSTANDING PERFORMANCE**: Low watt density design (10 watts/square inch, 1.5w/cm^2) for long service life.
- **EVEN HEATING**: Flat, low profile bottom design for even heating and varying liquid levels. (This configuration not recommended for electroless chemistry).
- **CORROSION RESISTANT HEAD**: Vapor tight, flame retardant polypropylene terminal enclosure with 3-foot (.9m) flexible PVC liquid tight conduit.
- **SAFETY FEATURES**:
  - Grounded internal metal element.
  - Thermal protector built in. Replaceable PTL-I fuse standard for solutions up to 190°F (88°C).
  - Non-floating construction.
- **CERTIFICATIONS**: UL, CSA, and CE.
- **SIZES**: 500 watts to 6,000 watts.
- **VOLTAGES**: 120, 240 or 480 volts. 208, 380, 415, 600 and other voltages available. Single phase only.
- **OPTIONS AVAILABLE** (consult factory):
  - Replaceable thermal protectors:
    - PTL-IM: for solutions from 190°F (88°C) to 220°F (104°C).
  - Resettable thermal protectors:
    - PTL-II: bi-metal switch for solutions up to 190°F (88°C).
    - PTL-III: type-J thermocouple for solutions from 190°F (88°C) to 210°F (99°C).
    - PIII: type-J thermocouple for solutions from 210°F (99°C) to 250°F (121°C).
  - Longer vertical lengths (cold zones).
  - Polypropylene guards: recommended for applications up to 180°F (82°C).
  - Fluoropolymer (PTFE) guards: recommended for chromic acid or solutions over 180°F (82°C).
  - Special configurations.
  - Longer wire and conduit lengths.
  - Flexible continuous fluoropolymer leads (PIII protector only).
  - Lower watt densities for highly viscous solutions and technical acids.
  - Temperature and level controls sized to match the heater.

DIMENSIONS

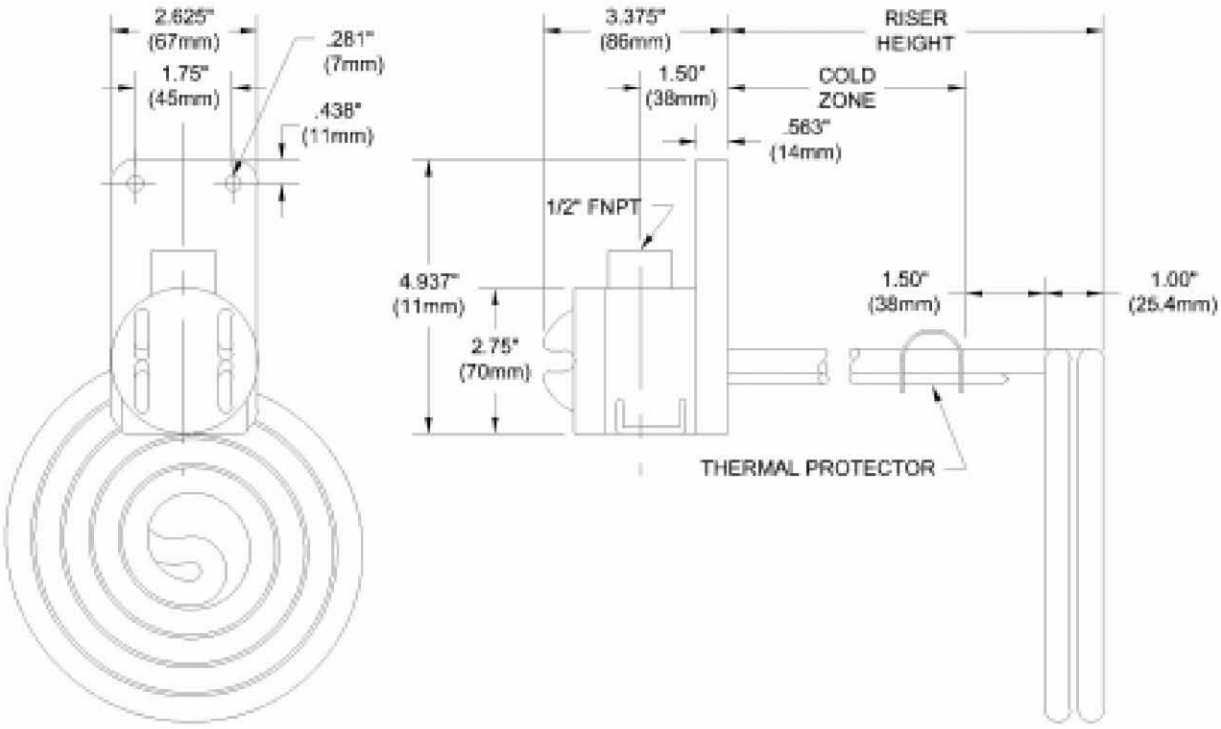

LOW PROFILE L-SHAPED FLUOROPOLYMER (PTFE) HEATER

Series

HXFL = PTFE sheathed
HSFL = 304 stainless steel

Wattage

.5 = 500
1 = 1000
2 = 2000
3 = 3000
4 = 4000
5 = 5000
6 = 6000

Voltage

1 = 120
2 = 240
4 = 480
-208- = 208
-277- = 277
-380- = 380
-415- = 415
-600- = 600

Diameter

05 = .5kW
06 = 1kW
08 = 2W
09 = 3kW
11 = 4kW
12 = 5kW
13 = 6kW

Options

X = any special configuration not called out in the part number (specify in clear text)

Vertical Length

-R12 = .5kW
-R12 = 1kW
-R18 = 2kW
-R18 = 3kW
-R18 = 4kW
-R18 = 5kW
-R18 = 6kW
specify custom lengths, not to exceed tank length

Guard Option

C = complete with guard

Type of Fuse

Replaceable Fuse	
-PTL-I (std)	for solutions up to 190°F
-PTL-IM	for 190° - 220°F solutions
Resettable Fuse	
(additional control components required)	
-PTL-II	for solutions up to 190°F
-PTL-III	for 190° - 210°F solutions
-PIII	for 210° - 250°F solutions

Wire and Conduit Length

no designator = 36" length standard
specify variations from standard
Ex: -X84 = 84"

ORDERING EXAMPLE:

HXFL5412-R18-PTL-I-X50

Flat L-Shaped fluoropolymer heater, 5000 watts, 480 volt, single phase, 12" diameter hot zone, 18" vertical length, PTL-I thermal fuse, 50" wire and conduit